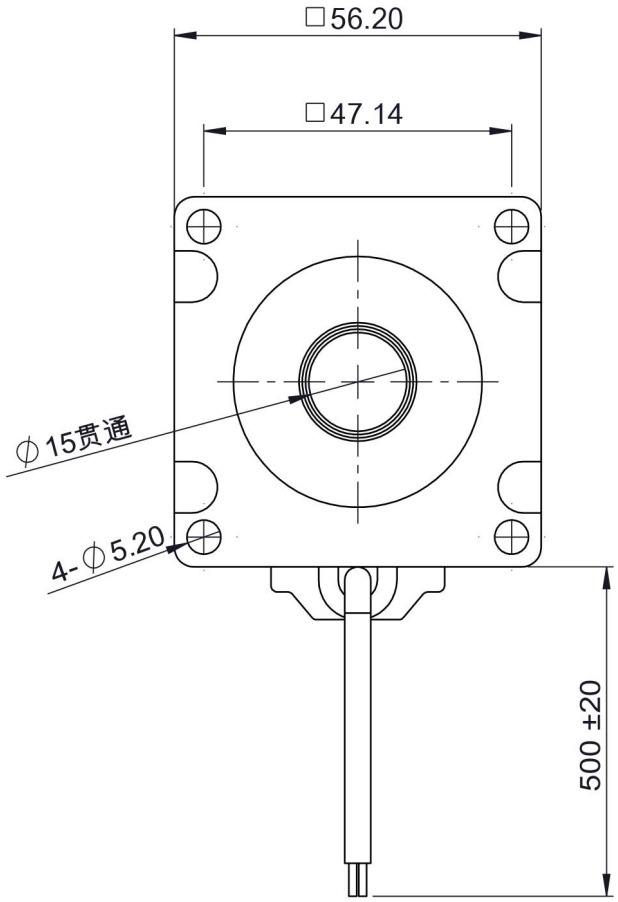

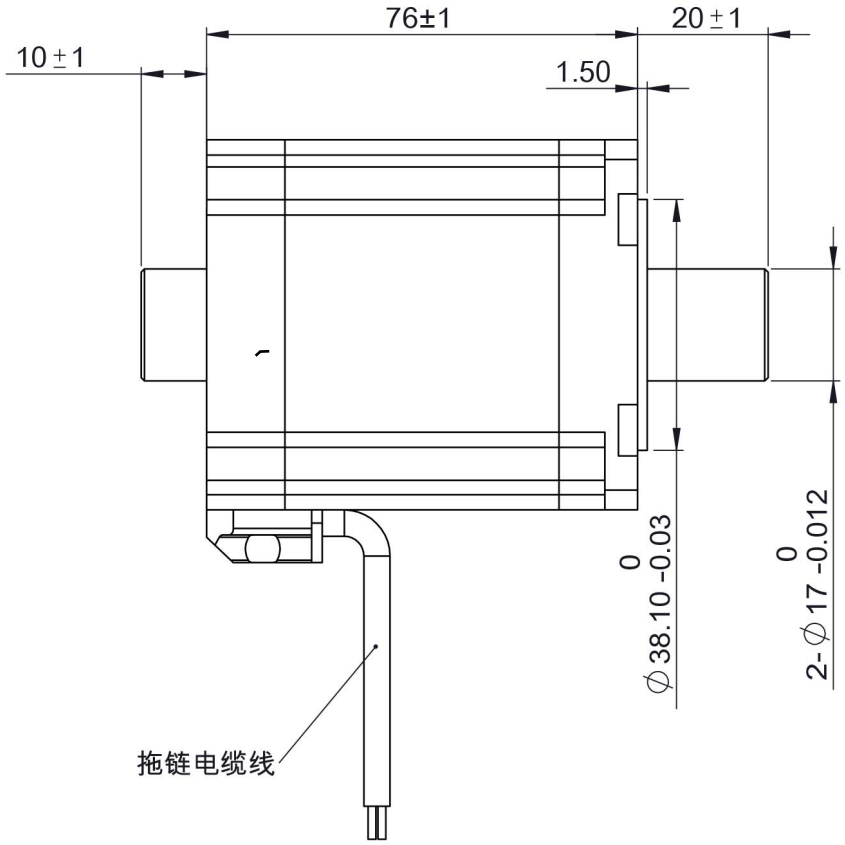

Phase	2	Lifetime (Hours)	Above 5000H
Step Angle	1.8°	Temperature Rise	Below 80K
Step Angle Error (No Load)	±0.09°以 or below	Insulation Withstand Voltage	500V A.C
Current	4.2 A	Insulation Resistance	Above 100 MΩ
Resistance (Phase)	0.60 Ω±10%	Insulation Class	B
Inductance (Phase)	1.8 mH±20%	Operating Temperature Range	-20°C~+50°C
Holding Torque	1.8 N.m	Operating Humidity Range	20%RH~90%RH
Radial Runout	0.025 MM(Load 450g)	Storage Temperature Range	-20°C~+70°C
Axial Runout	0.075 MM(Load 920g)	Storage Humidity Range	15%RH~95%RH
Rated Operating Status	Continuous		

Wire Color and Connection Diagram of the Motor

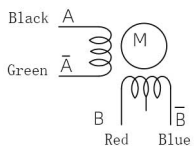

Note: The color and order of the motor leads are subject to the actual object.

Excitation Sequence (2-Phase Excitation)

CW	Step	A	B	A-	B-	CCW
	1	+	+	-	-	
	2	-	+	+	-	
	3	-	-	+	+	
	4	+	-	-	+	

Initial Direction: Follow the excitation sequence in the table, observing the clockwise direction from the mounting surface.

Label Content

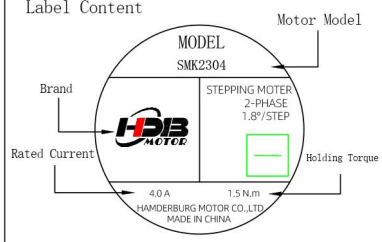

图纸编码	MS23-0290
物料代码	MS.452-23C4-066A-01
版本	A1.0
变更内容 Revision Record	
初次发放	
签字The signature	
日期 Date	

客户签字确认

标记	处数	更改文件号	签名	年月日
设计		标准化		
校核		工艺		
审核		批准		
图样标记	H	共1张 第1张		

视图方式:

比例

SMK2304
TWO-PHASE HOLLOW SHAFT STEPPER MOTOR

汉德保电机
WWW.HDBMOTORS.COM