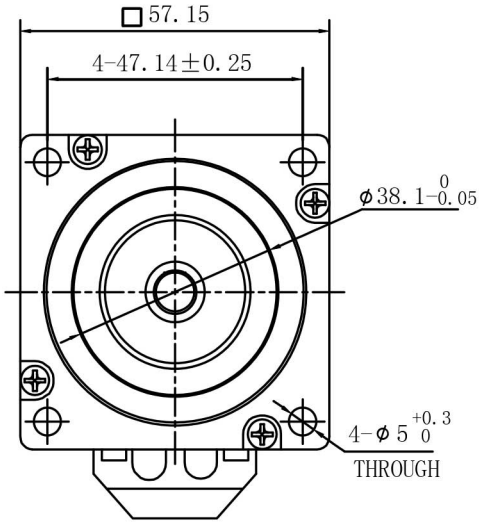

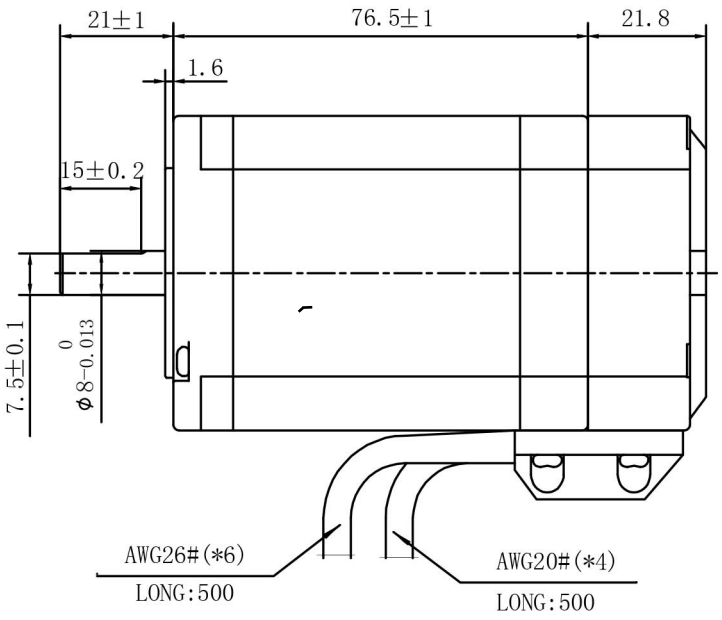

Phase	2	Rated Operating Status	Continuous
Step Angle	1.8°	Lifetime (Hours)	Above 5000H
Step Angle Error (No Load)	±0.09° or below	Temperature Rise	Below 80K
Encoder Line Count	1000 lines	Insulation Withstand Voltage	500V A.C
Rated Current	5.0 A	Insulation Resistance	Above 100 MΩ
Resistance (Phase)	0.38 Ω±10%	Insulation Class	B
Inductance (Phase)	1.52 mH±20%	Operating Temperature Range	-20°C~+50°C
Holding Torque	2 N.m	Operating Humidity Range	20%RH~90%RH
Radial Runout	0.025 MM(Load 450g)	Storage Temperature Range	-20°C~+70°C
Axial Runout	0.005 MM(Load 920g)	Storage Humidity Range	15%RH~95%RH

Motor Lead Colors and Wiring Diagram

Definition of Motor Wires		Definition of Encoder Wires			
1	A+ (Black)	1	+5VCC (Red)	6	EB+ (Blue)
2	A- (Green)	2	GND (Black)		
3	B+ (Red)	3	EA- (Gray)		
4	B- (Blue)	4	EA+ (Brown)		
		5	EB- (White)		

Note: The color and order of the motor leads are subject to the actual object.

Label Content

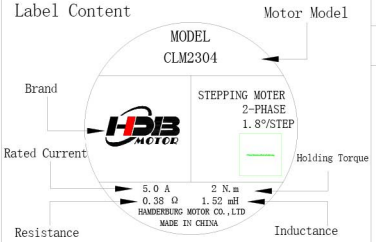

图纸编码	
物料代码	
版本 Rev	A1.0
变更内容 Revision Record	
初次发放	
签字The signature	
日期 Date	2023.10.21

客户签字确认

标记	处数	更改文件号	签名	年 月 日
设计		标准化		
校核		工艺		
审核		批准		
图样标记	H	共 1 张	第 1 张	

视图方式:

比例

CLM2304

TWO-PHASE CLOSED-LOOP STEPPER MOTOR

汉德保电机

WWW.HDBMOTORS.COM