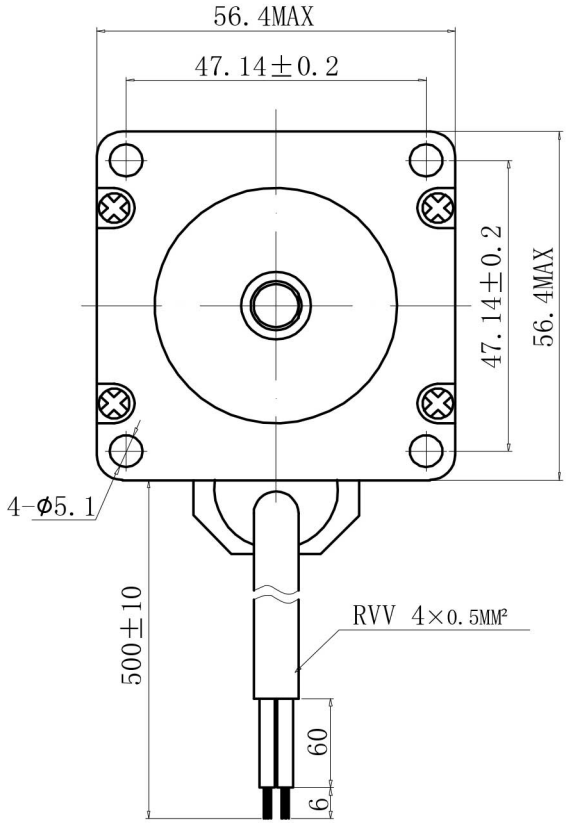

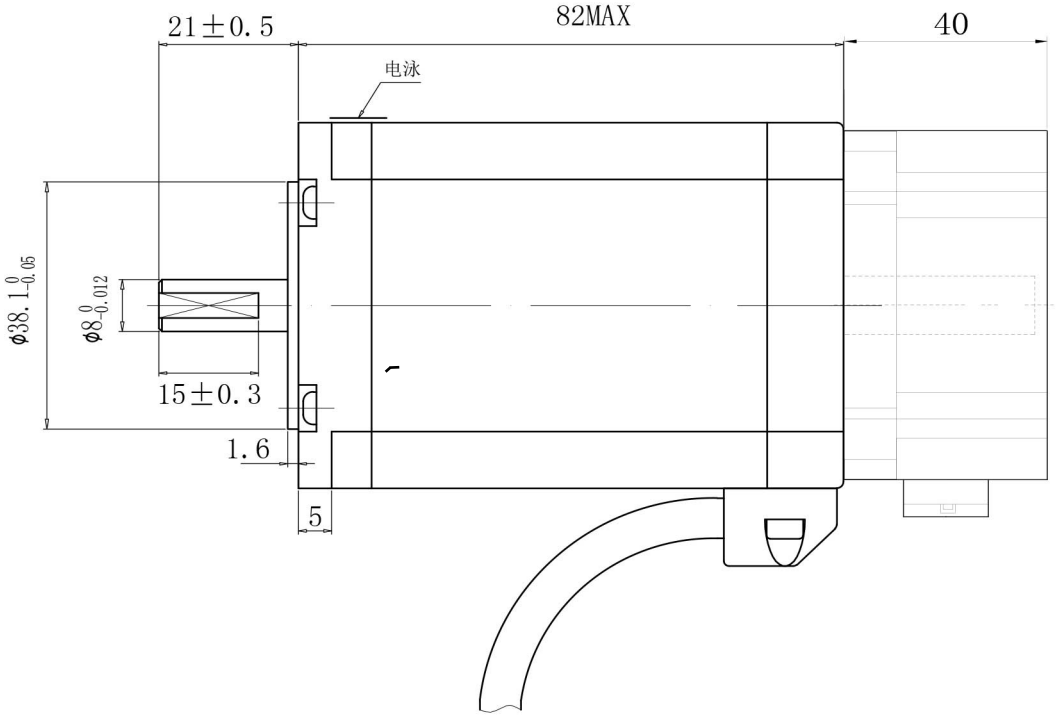

Phase	2	Rated Operating Status	Continuous
Step Angle	1.8°	Lifetime (Hours)	Above 5000H
Step Angle Error (No Load)	±0.09° or below	Temperature Rise	Below 80K
Current	4.2 A	Insulation Withstand Voltage	500V A.C
Resistance (Phase)	0.68 Ω±10%	Insulation Resistance	Above 100 MΩ
Inductance (Phase)	2.7 mH±20%	Insulation Class	B
Holding Torque	2.2 N.m	Operating Temperature Range	-20°C~+50°C
Rotor Inertia	≈ 460g.cm²	Operating Humidity Range	20%RH~90%RH
Weight	≈1.3KG	Storage Temperature Range	-20°C~+50°C
Radial Runout	0.025 MM(Load 450g)	Storage Humidity Range	15%RH~95%RH
Axial Runout	0.075 MM(Load 920g)		

Brake Lead Colors and Wiring Diagram

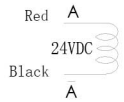

Note: The lead colors and wiring order are subject to the actual object.

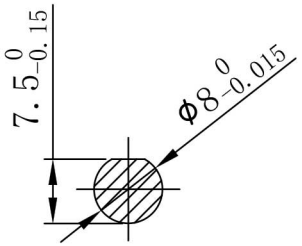

Wire Color and Connection Diagram of the Motor

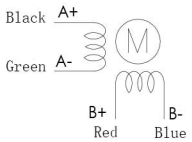

Note: The color and order of the motor leads are subject to the actual object.

Excitation Sequence (2-Phase Excitation)

CW	Step	A	B	A-	B-	
	1	+	+	−	−	
	2	−	+	+	−	
	3	−	−	+	+	
	4	+	−	−	+	CCW

Initial Direction: Follow the excitation sequence in the table, observing the clockwise direction from the mounting surface.

Label Content

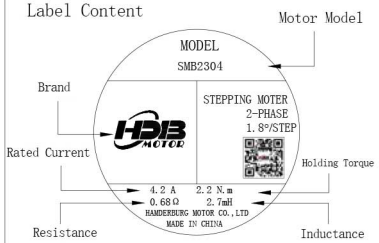

图纸编码	
物料代码	
版本 Rev	A1.0
变更内容 Revision Record	初次发放
签字The signature	
日期 Date	2023.10.23

客户签字确认

标记	处数	更改文件号	签名	年 月 日
设计		标准化		
校核		工艺		
审核		批准		
图样标记	H	共 1 张	第 1 张	

视图方式：

比例

SMB2304

BIPOLAR BRAKE STEPPER MOTOR

汉德保电机

WWW.HDBMOTORS.COM