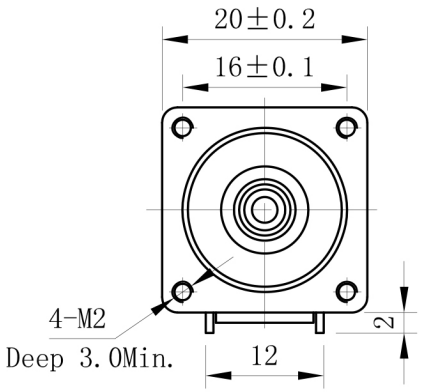

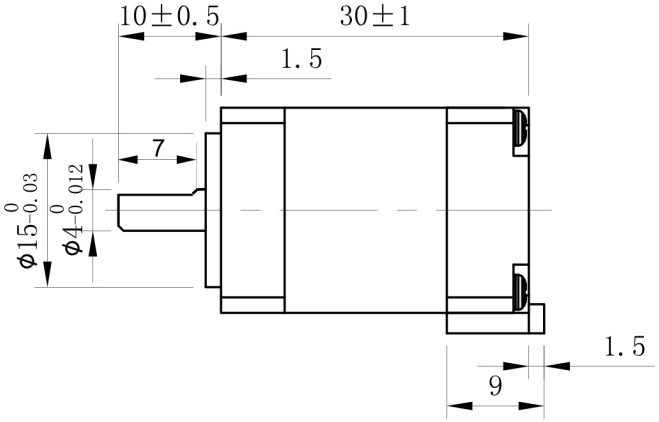

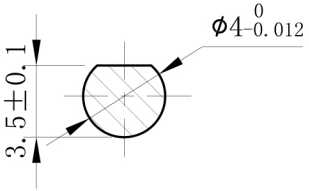

Phase	2	Rated Operating Status	Continuous
Step Angle	1.8°	Lifetime (Hours)	Above 5000H
Step Angle Error (No Load)	±0.09° or below	Temperature Rise	Below 80K
Current	0.6 A	Insulation Withstand Voltage	500V A.C
Resistance (Phase)	6.5 Ω±10%	Insulation Resistance	Above 100 MΩ
Inductance (Phase)	1.7 mH±20%	Insulation Class	B
Holding Torque	0.018 N.m	Operating Temperature Range	0° C~+50° C
Rotor Inertia	≈2 g.cm²	Operating Humidity Range	20%RH~90%RH
Weight	≈0.05 KG	Storage Temperature Range	-20° C~+70° C
Radial Runout	0.025 MM (Load 450g)	Storage Humidity Range	15%RH~95%RH
Axial Runout	0.075 MM (Load 920g)		

Wire Color and Connection Diagram of the Motor

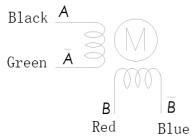

Note: The color and order of the motor leads are subject to the actual object.

Excitation Sequence (2-Phase Excitation)

CW	Step	A	B	A-	B-	
	1	+	+	−	−	
	2	−	+	+	−	
	3	−	−	+	+	
	4	+	−	−	+	CCW

Initial Direction: Follow the excitation sequence in the table, observing the clockwise direction from the mounting surface.

Label Content

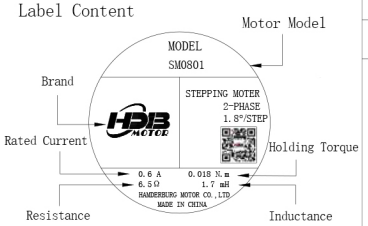

图纸编码	
物料代码	MS.07-08B4-027A-01
版本 Rev	A1.0
变更内容 Revision Record	初次发放
签字The signature	
日期 Date	2023.10.23

客户签字确认						视图方式:	SM0801
	标记	处数	更改文件号	签名	年 月 日		2-PHASE OPEN-LOOP STEPPER MOTOR
	设计		标准化			比例 1:1	
	校核		工艺				
	审核		批准				汉德保电机
	图样标记	H	共 1 张 第 1 张				WWW.HDBMOTORS.COM